INSTRUCTIONS FOR

Belt & Disc Sander

Stock No.50021 Part No.BDS368

IMPORTANT: PLEASE READ THESE INSTRUCTIONS CAREFULLY TO ENSURE THE SAFE AND EFFECTIVE USE OF THIS PRODUCT.

CE

GENERAL INFORMATION

These instructions accompanying the product are the original instructions. This document is part of the product, keep it for the life of the product passing it on to any subsequent holder of the product. Read all these instructions before assembling, operating or maintaining this product.

This manual has been compiled by Draper Tools describing the purpose for which the product has been designed, and contains all the necessary information to ensure its correct and safe use. By following all the general safety instructions contained in this manual, it will ensure both product and operator safety, together with longer life of the product itself.

All photographs and drawings in this manual are supplied by Draper Tools to help illustrate the operation of the product.

Whilst every effort has been made to ensure the accuracy of information contained in this manual, the Draper Tools policy of continuous improvement determines the right to make modifications without prior warning.

1. TITLE PAGE

1.1 INTRODUCTION:

USER MANUAL FOR:

BELT & DISC SANDER

Stock no. 50021
Part no. BDS368

1.2 REVISIONS:

Date first published March 2014

As our user manuals are continually updated, users should make sure that they use the very latest version.

Downloads are available from: http://www.drapertools.com/b2c/b2cmanuals.pgm

DRAPER TOOLS LIMITED
HURSLEY ROAD
CHANDLER'S FORD
EASTLEIGH
HAMPSHIRE
SO53 1YF
UK

WEBSITE: www.drapertools.com
PRODUCT HELPLINE: +44 (0) 23 8049 4344
GENERAL FAX: +44 (0) 23 8026 0784

1.3 UNDERSTANDING THIS MANUALS SAFETY CONTENT:

WARNING! Information that draws attention to the risk of injury or death.

CAUTION! Information that draws attention to the risk of damage to the product or surroundings.

1.4 COPYRIGHT © NOTICE:

Copyright © Draper Tools Limited.
Permission is granted to reproduce this publication for personal & educational use only.
Commercial copying, redistribution, hiring or lending is prohibited.
No part of this publication may be stored in a retrieval system or transmitted in any other form or means without written permission from Draper Tools Limited.

In all cases this copyright notice must remain intact.

2. CONTENTS

2.1 CONTENTS

PAGE CONTENT ***PAGE***

1 TITLE PAGE
- 1.1 INTRODUCTION 2
- 1.2 REVISION HISTORY....2
- 1.3 UNDERSTANDING THIS MANUAL 2
- 1.4 COPYRIGHT NOTICE....2

2 CONTENTS
- 2.1 CONTENTS 3

3 GUARANTEE
- 3.1 GUARANTEE....4

4 INTRODUCTION
- 4.1 SCOPE 5
- 4.2 SPECIFICATION 5
- 4.3 HANDLING & STORAGE 5

5 HEALTH & SAFETY INFORMATION
- 5.1 GENERAL SAFETY INSTRUCTIONS 6-7
- 5.2 ADDITIONAL SAFETY INSTRUCTIONS 8
- 5.3 CONNECTION TO THE POWER SUPPLY....9A

6 TECHNICAL DESCRIPTION
- 6.1 IDENTIFICATION 10B

7 UNPACKING & CHECKING
- 7.1 PACKAGING....10A
- 7.2 WHAT'S IN THE BOX? 10A

8 SETTING THE SANDER
- 8.1 MOUNTING THE SANDER TO A WORKBENCH 11
- 8.2 INSTALLING THE SANDING DISC TABLE 11
- 8.3 INSTALLING THE DUST DEFLECTOR 11
- 8.4 INSTALLING THE BACK STOP....12
- 8.5 INSTALLING THE WORK SUPPORT TABLE....12
- 8.6 VERTICAL SANDING 12
- 8.7 DUST EXTRACTION 13

9 BASIC SANDER OPERATIONS
- 9.1 NO-VOLT ON/OFF SWITCH....14
- 9.2 STRAIGHT SANDING....14
- 9.3 END SANDING ON THE SANDING BELT 14
- 9.4 CONTOUR SANDING 15
- 9.5 DISC SANDING....15
- 9.6 REPLACING THE SANDING BELT AND TRACKING 16
- 9.7 REPLACING THE SANDING DISC 16
- 9.8 CHANGING THE DRIVE BELT....16

10 MAINTENANCE 17

11 OPTIONAL ACCESSORIES
- 11.1 OPTIONAL ACCESSORIES 18

12 TROUBLESHOOTING 19

13 EXPLANATION OF SYMBOLS
- 13.1 EXPLANATION OF SYMBOLS....20

14 DISPOSAL
- 14.1 DISPOSAL....21

DECLARATION OF CONFORMITY ....ENCLOSED

3. GUARANTEE

3.1 GUARANTEE

Draper tools have been carefully tested and inspected before shipment and are guaranteed to be free from defective materials and workmanship.
Should the tool develop a fault, please return the complete tool to your nearest distributor or contact Draper Tools Limited, Chandler's Ford, Eastleigh, Hampshire, SO53 1YF. England.
Telephone Sales Desk: (023) 8049 4333 or Product Helpline (023) 8049 4344.
A proof of purchase must be provided with the tool.
If upon inspection it is found that the fault occurring is due to defective materials or workmanship, repairs will be carried out free of charge. This guarantee period covering parts/labour is 12 months from the date of purchase except where tools are hired out when the guarantee period is ninety days from the date of purchase. This guarantee does not apply to normal wear and tear, nor does it cover any damage caused by misuse, careless or unsafe handling, alterations, accidents, or repairs attempted or made by any personnel other than the authorised Draper warranty repair agent.
Note: If the tool is found not to be within the terms of warranty, repairs and carriage charges will be quoted and made accordingly.
This guarantee applies in lieu of any other guarantee expressed or implied and variations of its terms are not authorised.
Your Draper guarantee is not effective unless you can produce upon request a dated receipt or invoice to verify your proof of purchase within the guarantee period.
Please note that this guarantee is an additional benefit and does not affect your statutory rights.
Draper Tools Limited.

4. INTRODUCTION

4.1 SCOPE

This belt and disc sander is intended for sanding and shaping wood, plastic and nonferrous metals only. Any other application is considered mis use.

4.2 SPECIFICATION

Stock no	50021
Part no	BDS368
Rated voltage	230V~50Hz
Rated Input	350W
Belt Size	915 x 100mm (36 x 4")
Belt Speed	480M/min.
Belt Table Size (tilt)	100 x 152mm (0 - 45°)
Disc Size Ø	200mm (8")
Disc Speed	2850min^{-1}
Disc Table Size (tilt)	158 x 266mm (0 - 45°)
Sound Pressure Level (LpA)	79dB(A)
Sound Power Level (LwA)	91dB(A)
Vibration Level	N/A
Weight	20kg

4.3 HANDLING & STORAGE

The environment will have a negative result on its operation if you are not careful. If the air is damp, components will rust. If the machine is unprotected from dust and debris; components will become clogged: And if not cleaned and maintained correctly or regularly the machine will not perform at its best.

5. HEALTH & SAFETY INFORMATION

5.1 GENERAL SAFETY INSTRUCTIONS

WARNING: When using electric tools basic safety precautions should always be followed to reduce the risk of fire, electric shock and personal injury including the following.

Read all these instructions before attempting to operate this product and save these instructions.

SAFE OPERATION

1. **KEEP WORK AREA CLEAR**
   Cluttered areas and benches invite injuries.
2. **CONSIDER WORK AREA ENVIRONMENT**
   Do not expose tools to rain.
   Do not use tools in damp or wet locations.
   Keep work area well lit.
   Do not use tools in the presence of flammable liquids or gases.
3. **GUARD AGAINST ELECTRIC SHOCK**
   Avoid body contact with earthed or grounded surfaces (e.g. pipes, radiators, ranges, refrigerators).
4. **KEEP OTHER PERSONS AWAY**
   Do not let persons, especially children, not involved in the work touch the tool or the extension cord and keep them away from the work area.
5. **STORE IDLE TOOLS**
   When not in use, tool should be stored in a dry locked-up place, out of reach of children.
6. **DO NOT FORCE THE TOOL**
   It will do the job better and safer at the rate for which it was intended.
7. **USE THE RIGHT TOOL**
   Do not force tools to do the job of a heavy duty tool.
   Do not use tools for purposes not intended; for example do not use circular saws to cut tree limbs or logs.
8. **DRESS PROPERLY**
   Do not wear loose clothing or jewellery, they can be caught in moving parts.
   Non-skid footwear is recommended when working outdoors.
   Wear protective hair covering to contain long hair.
9. **USE PROTECTIVE EQUIPMENT**
   Use safety glasses.
   Use face or dust mask if working operations create dust.
10. **CONNECT DUST EXTRACTION EQUIPMENT**
    If the tool is provided for the connection of dust extraction and collecting equipment, ensure these are connected and properly used.
11. **DO NOT ABUSE THE CORD**
    Never yank the cord to disconnect it from the socket. Keep the cord away from heat, oil and sharp edges.
12. **SECURE WORK**
    Where possible use clamps or a vice to hold the work. It is safer than using your hand.
13. **DO NOT OVERREACH**
    Keep proper footing and balance at all times.
14. **MAINTAIN TOOLS WITH CARE**
    Keep cutting tools sharp and clean for better and safer performance.
    Follow instruction for lubricating and changing accessories.
    Inspect tool cords periodically and if damaged have them repaired by an authorised service facility.
    Inspect extension cords periodically and replace if damaged.
    Keep handles dry, clean and free from oil and grease.
15. **DISCONNECT TOOLS**
    When not in use, before servicing and when changing accessories such as blades, bits and cutters, disconnect tools from the power supply.
16. **REMOVE ADJUSTING KEYS AND WRENCHES**
    Form the habit of checking to see that keys and adjusting wrenches are removed from the tool before turning it on.

5. HEALTH & SAFETY INFORMATION

17. **AVOID UNINTENTIONAL STARTING**
Ensure switch is in "off" position when plugging in.
18. **USE OUTDOOR EXTENSION LEADS**
When the tool is used outdoors, use only extension cords intended for outdoor use and so marked.
19. **STAY ALERT**
Watch what you are doing, use common sense and do not operate the tool when you are tired.
20. **CHECK DAMAGED PARTS**
Before further use of tool, it should be carefully checked to determine that it will operate properly and perform its intended function.
Check for alignment of moving parts, binding of moving parts, breakage of parts, mounting and any other conditions that may affect its operation.
A guard or other part that is damaged should be properly repaired or replaced by an authorised service centre unless otherwise indicated in this instruction manual.
Have defective switches replaced by an authorized service centre.
Do not use the tool if the switch does not turn it on and off.
21. **WARNING**
The use of any accessory or attachment other than one recommended in this instruction manual may present a risk of personal injury.
22. **HAVE YOUR TOOL REPAIRED BY A QUALIFIED PERSON**
This electric tool complies with the relevant safety rules. Repairs should only be carried out by qualified persons using original spare parts, otherwise this may result in considerable danger to the user.

5. HEALTH & SAFETY INFORMATION

5.2 ADDITIONAL SAFETY INSTRUCTIONS

SAFETY
Safety is a combination of operator common sense and alertness at all times when the sander is being used.

WARNING
For your own safety, do not attempt to operate the belt and disc sander until it is completely assembled and installed according to the instructions and until you have read and understand the following.

1. STABILITY OF MACHINE:
   There may be a tendency for the machine to tip over or move during certain operations, due to this, the sander must be bolted down.
2. LOCATION:
   The machine should be positioned so the operator or a casual observer are not forced to stand in line with the sanding belt or disc. This machine is intended for indoor use only.
3. KICKBACK:
   When sanding on the disc, always apply the workpiece left of centre of the disc. Applying the workpiece to the right side could cause it to fly up (kickback) which could be dangerous.
4. PROTECTION:
   Eyes, hands, face, ears and body:
   (a) Always wear safety goggles (not glasses) that comply to a recognised standard. Wear a face mask if the operation is dusty. Wear ear plugs or muffs during extended periods of operation. Do not wear gloves, jewellery or watches. Roll long sleeves above the elbow. Tie back long hair.
   (b) Do not sand pieces of material too small to hold comfortably by hand.
   (c) Avoid awkward hand positions, where a sudden slip could cause a hand to move into the sanding disc or belt.
   (d) Never stand on the machine.
   (e) Never turn your sander "ON" before clearing the belt table and worktable of all objects.
   (f) Make sure the sanding belt runs in the right direction (directional arrow on inside of belt). Always have it adjusted correctly so that the belt does not run off the rollers.
   (g) Hold the work firmly when sanding on the belt and against the worktable when sanding on the disc.
   (h) Always adjust the worktable to within a maximum of 2mm off the sanding disc or belt.
   (i) When sanding a large piece of material, provide additional support at table height.
   (j) Never leave when the machine is on, wait until the machine has come to a complete stop.
   (k) Do not perform assembly or adjustment work on the table while the sander is operating.
   (l) Turn sander "OFF" and remove plug from power supply before removing any accessories.
5. If any part of this belt and disc sander breaks, bends, or fails in any way, or any electrical component fails to perform properly, or if any part is missing, turn off power switch, remove plug from the power supply and replace damaged, missing and/or failed parts before resuming operation.
6. Do not sand with the workpiece unsupported. Support it with the backstop or worktable. The only exception is curved work performed on the outer end of the belt (idler roller).
7. THINK SAFETY:
   Safety is a combination of operator common sense and alertness at all times when the sander is in operation.

CAUTION:
This Belt and Disc Sander is designed solely for wood and nonferrous metals only. Any other materials will cause damage to the product or risk of fire.

5.3 CONNECTION TO THE POWER SUPPLY

Make sure the power supply information on the machine's rating plate are compatible with the power supply you intend to connect it to.

The product comes supplied with a UK standard 3 pin plug fitted. It is designed for connection to a domestic power supply rated at 230V AC.

Because it is constructed mostly of metal parts, it is a Class 1 machine; meaning, it must have an earth connection in the power supply. This is to prevent electrocution in the event of a failure.

Apart from replacing the fuse in the plug, no other electrical work is recommended on this product.

WARNING! When using electric tools basic safety precautions should always be followed to reduce the risk of fire, electric shock and personal injury including the following.

Read all these instructions before attempting to operate this product and save these instructions.

BLANK

6. TECHNICAL DESCRIPTION

6.1 IDENTIFICATION

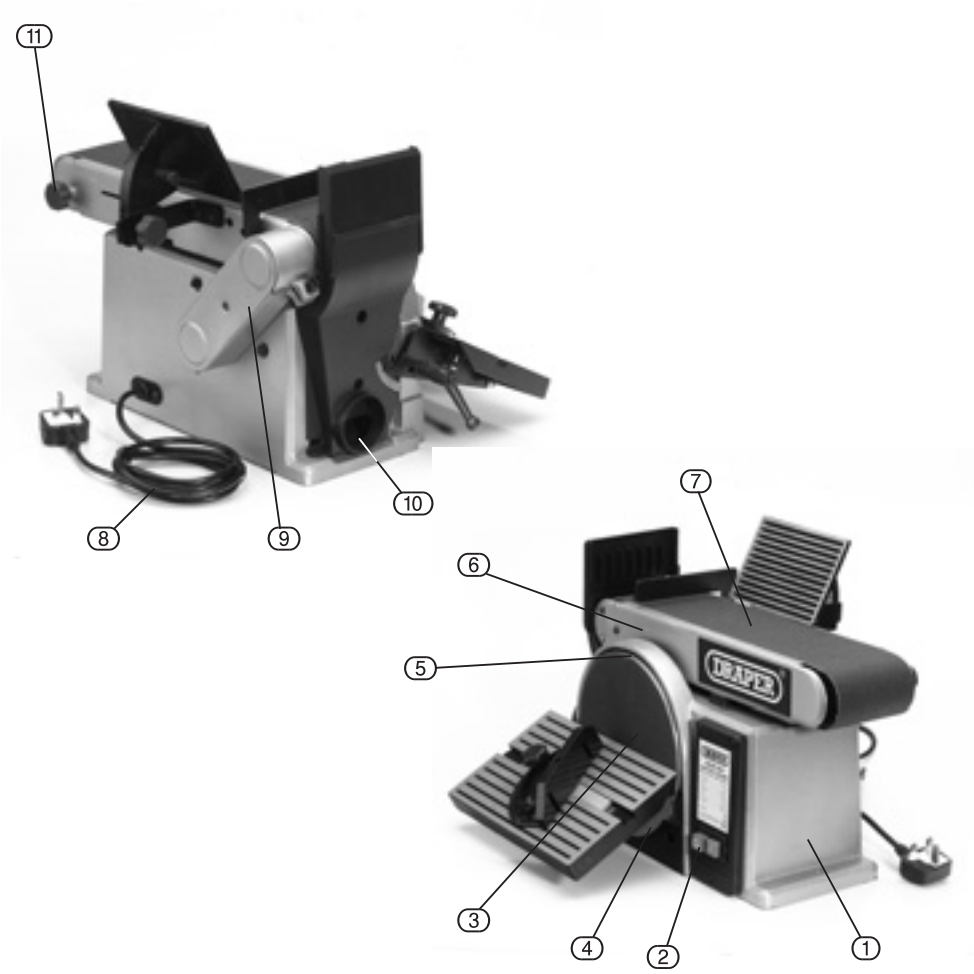

1. Machine housing/body.
2. No volt switch.
3. Abrasive sanding disc.
4. Lower disc guard.
5. Backing wheel.
6. Sanding bed.
7. Abrasive sanding belt.
8. Approved moulded plug & cable.
9. Drive belt cover.
10. Dust extraction outlet.
11. Belt tracker adjuster.

7. UNPACKING & CHECKING

7.1 PACKAGING

Carefully remove the product from the packaging and examine it for any sign of damage that may have happened during shipping. Lay the contents out and check them against the parts shown below. If any part is damaged or missing; please contact the Draper Helpline (the telephone number appears on the Title page) and do not attempt to use the power tool.

The packaging material should be retained at least during the guarantee period: in case the machine needs to be returned for repair.

Warning! Some of the packaging materials used may be harmful to children. Do not leave any of these materials in the reach of children.

If any of the packaging is to be thrown away, make sure they are disposed of correctly; according to local regulations.

7.2 WHAT´S IN THE BOX?

As well as the product; there are several parts not fitted or attached to it.

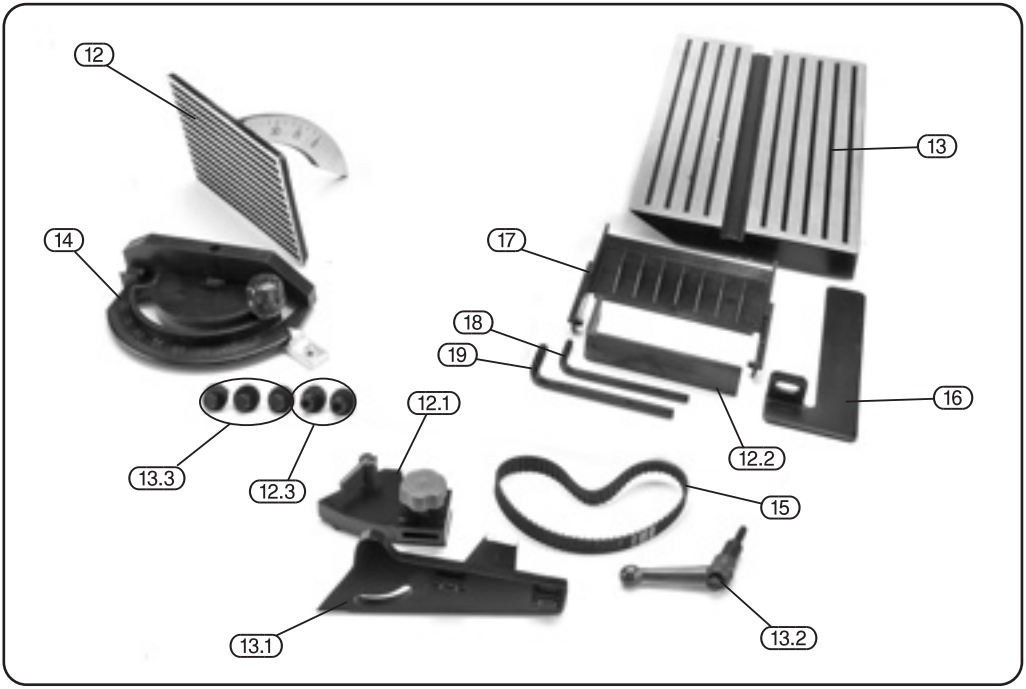

(12) Workpiece support table (sanding belt).
(12.1) Workpiece support angle adjustment.
(12.2) Workpiece support bracket.
(12.3) 2 x 5mm Hex. socket bolts and washers.
(13) Workpiece support table (sanding disc).
(13.1) Workpiece support bracket.
(13.2) Workpiece support locking handle.
(13.3) 3 x 10mm bolt and washers.
(14) Mitre guide.
(15) Replacement drive belt
(16) Workpiece stop.
(17) Dust deflector.
(18) 5mm Hex. key.
(19) 6mm Hex. key.

8. SETTING THE SANDER

8.1 MOUNTING THE SANDER TO A WORKBENCH - FIG. 1

The sander should be fastened securely to a firm supporting surface such as a workbench.

If mounting to a workbench, place the sander in a suitable position and mark the surface through the holes in the base (1).

Remove the sander and drill the holes, align and insert the bolts and nut securely (fixings not supplied).

8.2 INSTALLING THE SANDING DISC TABLE - FIGS. 2 - 3

Locate the table (13), bracket (13.1) and securing handle (13.2).

Remove the bolts from the underside of the table and fit the bracket.

Now offer up the assembly to the sander. Insert the locating lug into the hole in the housing and secure it in place with the locking handle (13.2).

Using an engineers square (for example Draper Stock No.34065), adjust the table so it is square with the sander and running parallel across the disc face (approx. 2mm gap), then tighten the bolts holding the bracket to the table.

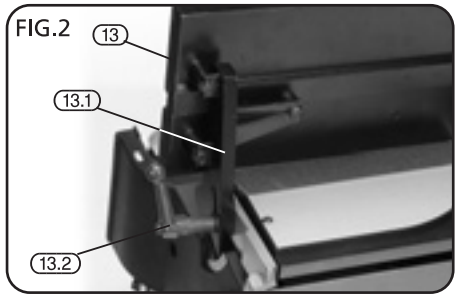

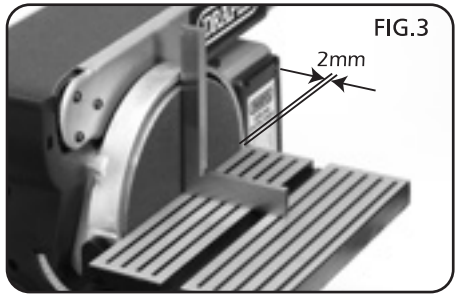

8.3 INSTALLING THE DUST DEFLECTOR - FIG. 4

Locate the pegs on each side of the dust deflector (17) into the slots on the dust extraction plate (10.1).

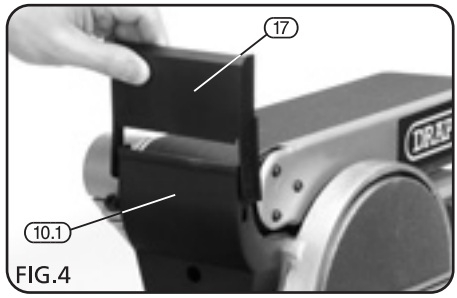

8. SETTING THE SANDER

8.4 INSTALLING THE BACK STOP - FIG. 5

Fix the back stop (16) in place on the back of the sanding belt assembly and adjust it with 1.5mm gap to allow sawdust to flow under.

FIG.5

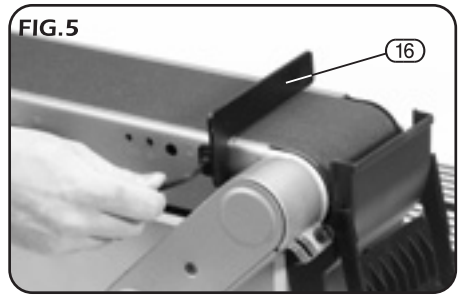

8.5 INSTALLING THE WORK SUPPORT TABLE - FIGS. 6 - 7

Bolt the support bracket (12.2) to the sanding belt assembly.

Assemble the table to the locking bracket (12.1).

Slide the assembled guide onto the support bracket and lock into place with the locking knob.

Use the engineers square to adjust the guide so it is square with the sanding belt.

When in place lock off with the securing screw.

NOTE: The angle adjustment is only to be used as a guide.

FIG.6

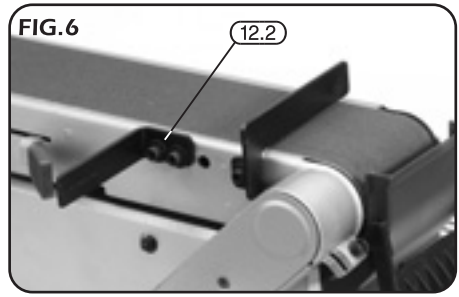

FIG.7

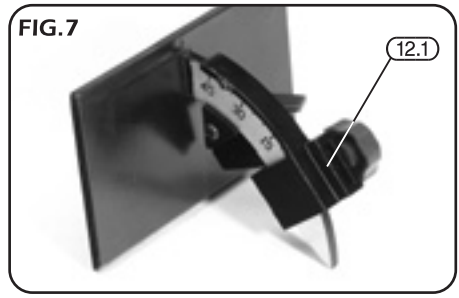

8.6 VERTICAL SANDING - FIG. 8

For the sanding belt to be used in the vertical position, the back stop, support table and bracket must all be removed.

Loosen the locking bolt (1.1) and put the belt in the upright position and then retighten the bolt.

Next the sanding disc table must be removed and fitted in the same way, but using the fixture holes in the side of the sanding belt assembly.

FIG.8

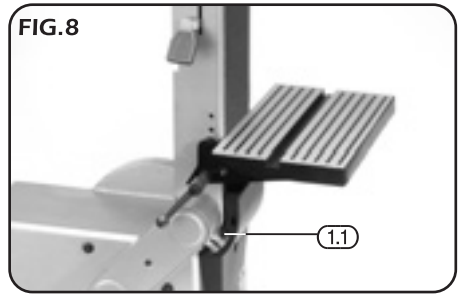

8. SETTING THE SANDER

8.7 DUST EXTRACTION - FIG. 9

FIG.9

Inhalation of dust particles can be detrimental to health.

The dust outlet must be connected with a dust extraction machine.

NOTE: Due to the outlet diameter, a size adaptation may be necessary.

All wood dust (including dust from composites like chipboards and fibreboards, etc.) is hazardous to health; it can affect the nose, the respiratory system and the skin.

For example MDF (medium density fibreboard) which contains formaldehyde is a known carcinogen.

In addition to the above measures a correctly fitted dust mask, suitable for the activity and in accordance to the relevant standard, must be worn.

For work activities involving exposure to the fine wood dust, a mask rated to at least FFP2 should be used.

9. BASIC SANDER OPERATIONS

IMPORTANT: Make sure that the mains voltage matches the voltage stated on the machines rating plate.

FIG.10

9.1 NO-VOLT ON/OFF SWITCH - FIG. 10

NOTE: The BDS368 is fitted with a no-volt on/off switch (2).

In the event of a power failure the machine will have to be manually restarted.

To switch the machine on, push the button marked (I).

To switch the machine off, push the button marked (O).

To switch the machine off in an emergency strike the (O) button.

CAUTION: This Belt and Disc Sander is designed solely for wood and nonferrous metals only. Any other materials will cause damage to the product or risk of fire.

FIG.11

9.2 STRAIGHT SANDING - FIG. 11

Hold the work firmly with both hands, keeping fingers away from the belt.

Straight pieces shorter than the belt table are sanded by holding the workpiece lightly against the belt. Move it back and forth across the belt, keeping the end butted against the stop fence. This fence prevents the workpieces from slipping off the table. USE EXTRA CAUTION WHEN SANDING THIN PIECES. When finishing long pieces, remove the stop fence. Start the work at one end and gradually push it to the other end. Feed it slowly across the width, at the same time, apply only enough pressure to allow the belt to remove material. If the belt stalls and belt pulleys slip while applying moderate pressure, the belt requires more tension.

FIG.12

9.3 END SANDING ON THE SANDING BELT - FIG. 12

It is more convenient to sand the ends of long workpieces with the sanding belt in a vertical position. Move the work evenly across the sanding belt.

9. BASIC SANDER OPERATIONS

NOTE: Remove the plug from the socket before carrying out adjustment, servicing or maintenance.

FIG.13

9.4 CONTOUR SANDING - FIG. 13

Inside contours: Inside curves can be sanded on the drums at either end of the machine. Hold the work firmly, press the contour lightly against the drum on one side and move the work slowly across the drum while moving up the contour against the drum.

Outside contours: Outside curves can be sanded on the belt table of the unsupported side of the belt with the table in the vertical position.

Hold the work firmly. Begin the curve lightly against one side and feed it across the belt towards the other side while moving up the contour of the workpiece.

Outside contours on the end of a workpiece can be sanded with the sanding disc. Feed the work lightly against the disc and move it back and forth from the centre of the disc to the outside edge.

9.5 DISC SANDING - FIG. 14

Disc sanding should be done on the outer edge of the disc which revolves downward. Applying the workpiece to the "UPSIDE" of the disc may cause it to fly up, which could be dangerous to the operator.

The mitre gauge (14) is very useful as a guide when chamfering and finishing angle sanding.

FIG.14

9. BASIC SANDER OPERATIONS

9.6 REPLACING THE SANDING BELT AND TRACKING - FIGS. 15 - 16

WARNING: TO AVOID INJURY FROM ACCIDENTAL STARTING, TURN THE POWER SWITCH "OFF" AND REMOVE THE PLUG FROM THE POWER SUPPLY BEFORE REMOVING OR INSTALLING SANDING BELTS.

On the inside of the sanding belt you will find "direction arrows". The sanding belt must run in the direction of these arrows so that the splice does not come apart.

1. Loosen the bed locking screw (1.1) and lift the bed to approx. 45°, Fig.15.
2. Slide the tension lever (6.1) to the left to release the belt tension.
3. Place the sanding belt over the pulleys with the directional arrows pointing in an anticlockwise direction when looking at the sander from the disc side. Make sure the belt is centred on both pulleys.
4. Tension the sanding belt by sliding the tension lever back.
5. Re-connect to the power supply. Turn switch "ON" and immediately "OFF", noting if the belt tends to slide off the idler pulley or drive pulley. If the belt did not try to slide off, it is tracking correctly.
6. If the belt moves towards the disc, turn the tracking knob (11) anticlockwise ¼ of a turn, Fig.16.
7. If the sanding belt moves away from the disc, turn the tracking knob (6.2) clockwise ¼ of a turn.
8. Turn the switch "ON" and immediately "OFF" again, noting any belt movement. Re-adjust the tracking knob if necessary.

9.7 REPLACING THE SANDING DISC - FIG. 17

With the table removed, dismantle the sanding disc guard (4) by removing the screws. Pull off the used disc and stick the new adhesive backed disc centrally on the disc.

9.8 CHANGING THE DRIVE BELT - FIG. 18

Remove the single screw and take off covering plate (9). Loosen the three bolts (9.1) and push the housing so the drive belt (15) becomes slack. Remove and replace the belt, re-tension the housing so the belt is sufficiently tight and secure housing bolts. Refit cover (9).

FIG.15

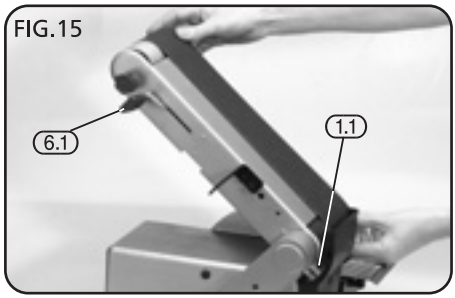

FIG.16

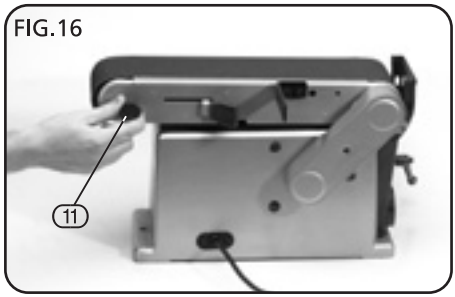

FIG.17

FIG.18

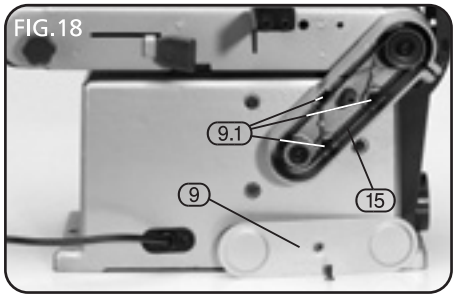

10. MAINTENANCE

Regular inspection and cleaning reduces the necessity for maintenance operations and will keep your tool in good working condition.

The motor must be correctly ventilated during tool operation. For this reason avoid blocking the air inlets. After use disconnect the tool from the power supply and vacuum the ventilation slots.

If the replacement of the supply cord is necessary, this has to be done by the manufacturer or his agent in order to avoid a safety hazard.

A coat of wax polish applied to the worktable will make it easier to feed the work while finishing.

Do not apply wax to the abrasive belt table because the belt could pick up the wax and deposit it on the pulleys, causing the belt to slip.

11. OPTIONAL ACCESSORIES

The following accessories are available from your local Draper stockist:

SANDING DISCS:

STOCK No.	PART No.	GRIT GRADE	PACK QUANTITY
23347	SD8	60	5 discs
23348	SD8	80	5 discs
23349	SD8	100	5 discs
23350	SD8	120	5 discs
23353	SD8	Assorted	5 discs

HOOK & LOOP SANDING DISCS:

STOCK No.	PART No.	GRIT GRADE	PACK QUANTITY
23354	SD8V	60	5 discs
23355	SD8V	80	5 discs
23358	SD8V	100	5 discs
23359	SD8V	120	5 discs
23360	SD8V	Assorted	5 discs

SELF ADHESIVE/HOOK & LOOP PAD 8":

STOCK No.	PART No.	GRIT GRADE	PACK QUANTITY
52612	SD8VP	-	1

SANDING BELTS:

STOCK No.	PART No.	GRIT GRADE	PACK QUANTITY
36069	SB436	60	3
36071	SB436	80	3
36073	SB436	100	3
36074	SB436	120	3
36075	SB436	Assorted	3

12. TROUBLESHOOTING

WARNING: FOR YOUR OWN SAFETY ALWAYS TURN THE MAIN SWITCH ON THE MACHINE "OFF" AND REMOVE THE PLUG FROM THE POWER SUPPLY BEFORE CARRYING OUT ANY MAINTENANCE OR TROUBLESHOOTING.

TROUBLE	PROBABLE CAUSE	REMEDY
Motor will not run.	1. Defective ON/OFF switch. 2. Burned out motor.	1. Replace defective parts before using belt and disc sander again. 2. Any attempt to repair this motor may create a HAZARD unless repair is done by a qualified service technician.
Machine slows down when sanding	1. Drive belt too tight. 2. Applying too much pressure to workpiece	1. Decrease belt tension. 2. Ease up on pressure.
Sanding belt runs off pulleys.	1. Not tracking properly.	1. Adjust tracking, see Operation & Use Section "Replacing the Sanding Belt - Tensioning and Tracking" on page 16.
Wood burns while sanding.	1. Sanding disc or belt is glazed with sap.	1. Replace disc or belt.

13. EXPLANATION OF SYMBOLS

12.1 EXPLANATION OF SYMBOLS

Warning!
Wear dust mask.

Warning!
Wear goggles.

Warning!
Read the instruction manual

Do not dispose of WEEE* as
unsorted municipal waste.

* Waste Electrical & Electronic Equipment

14. DISPOSAL

14.1 DISPOSAL

- At the end of the machine's working life, or when it can no longer be repaired, ensure that it is disposed of according to national regulations.
- Contact your local authority for details of collection schemes in your area.

  In all circumstances:
  - Do not dispose of power tools with domestic waste.
  - Do not incinerate.
  - Do not abandon in the environment.
  - Do not dispose of WEEE* as unsorted municipal waste.

* Waste Electrical & Electronic Equipment.

NOTES

NOTES

CONTACTS

- **DRAPER TOOLS LIMITED,**
  Hursley Road, Chandler's Ford,
  Eastleigh, Hampshire. SO53 1YF. U.K.

- **Helpline:** (023) 8049 4344
- **Sales Desk:** (023) 8049 4333
- **Internet:** www.drapertools.com
- **E-mail:** sales@drapertools.com
- **Sales Fax:** (023) 8049 4209
- **General Enquiries:** (023) 8026 6355

- **Service/Warranty Repair Agent**
  For aftersales servicing or warranty repairs, please contact the Draper Tools Helpline for details of an agent in your local area.

YOUR DRAPER STOCKIST

OAKC110314